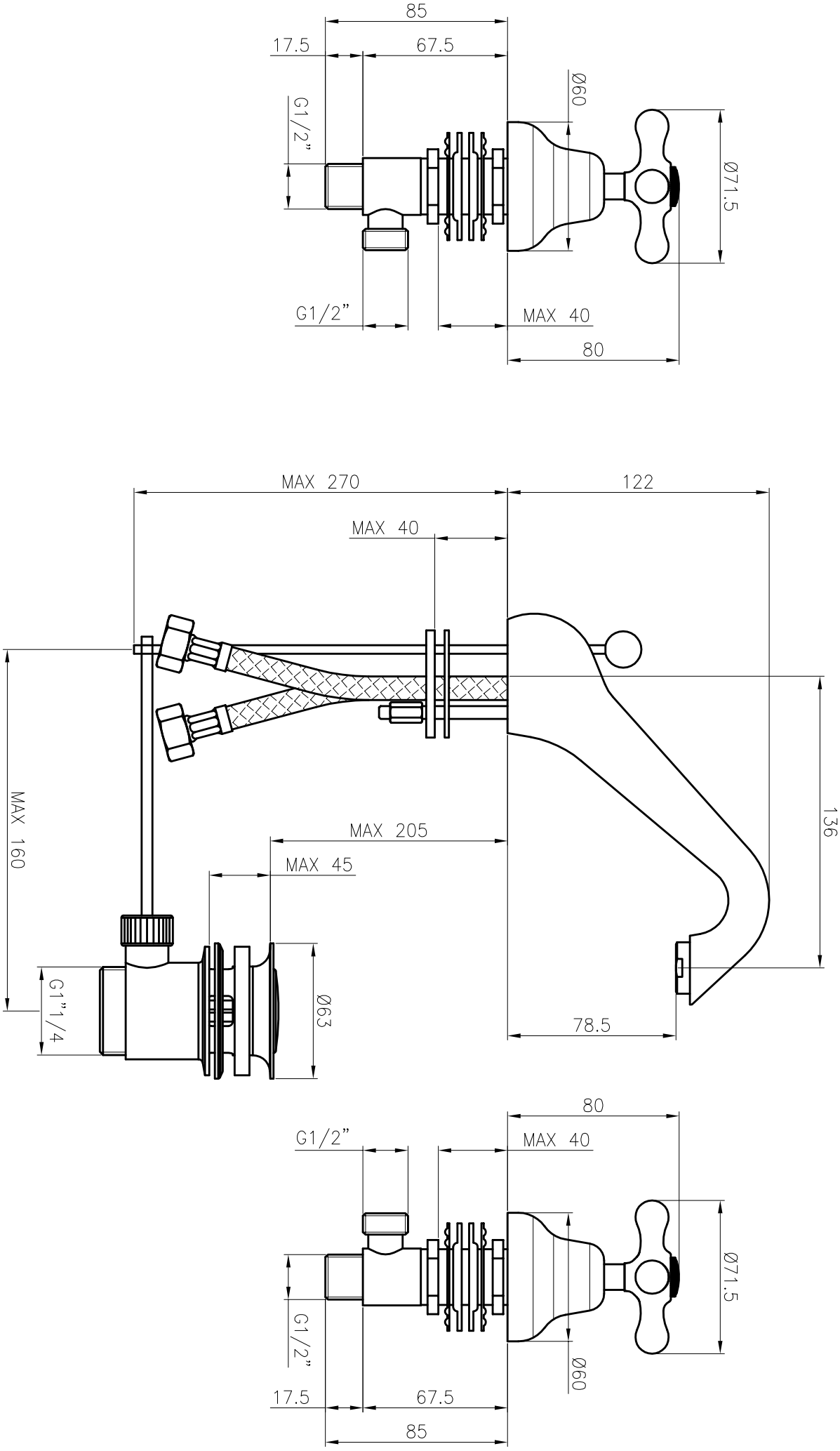
85
17.5
67.5
Ø60
G1/2”
Ø71.5
G1/2”
MAX 40
80
MAX 270
122
MAX 40
MAX 160
MAX 205
MAX 45
136
G1”1/4
Ø63
78.5
80
G1/2”
MAX 40
Ø71.5
G1/2”
Ø60
17.5
67.5
85