Normative / Stds reference	Condizioni di utilizzo / Terms of Use	
UNI EN 13828:2004	Acqua Pressione massima 10bar Temperatura massima in continuo 70°C Temperatura di picco 90°C Temperatura minima -10°C No SHOCK termico Funzionalità garantita solo a valvola aperta o chiusa,non parzialmente aperta o chiusa	Water Maximum pressure 10bar Maximum temperature in continuous 70°C Peak temperature 90°C Minimum temperature -10°C No thermal SHOCK Functionality is guaranteed only with open or closed valve,not partially open or closed
Compatibilità / Compatibility		
UBA list		
Certificazioni / Homologations		
-		

Codice Dianflex: 240-9424

MARCATURA SUL LATO OPPOSTO
MARKING ON OPPOSITE SIDE

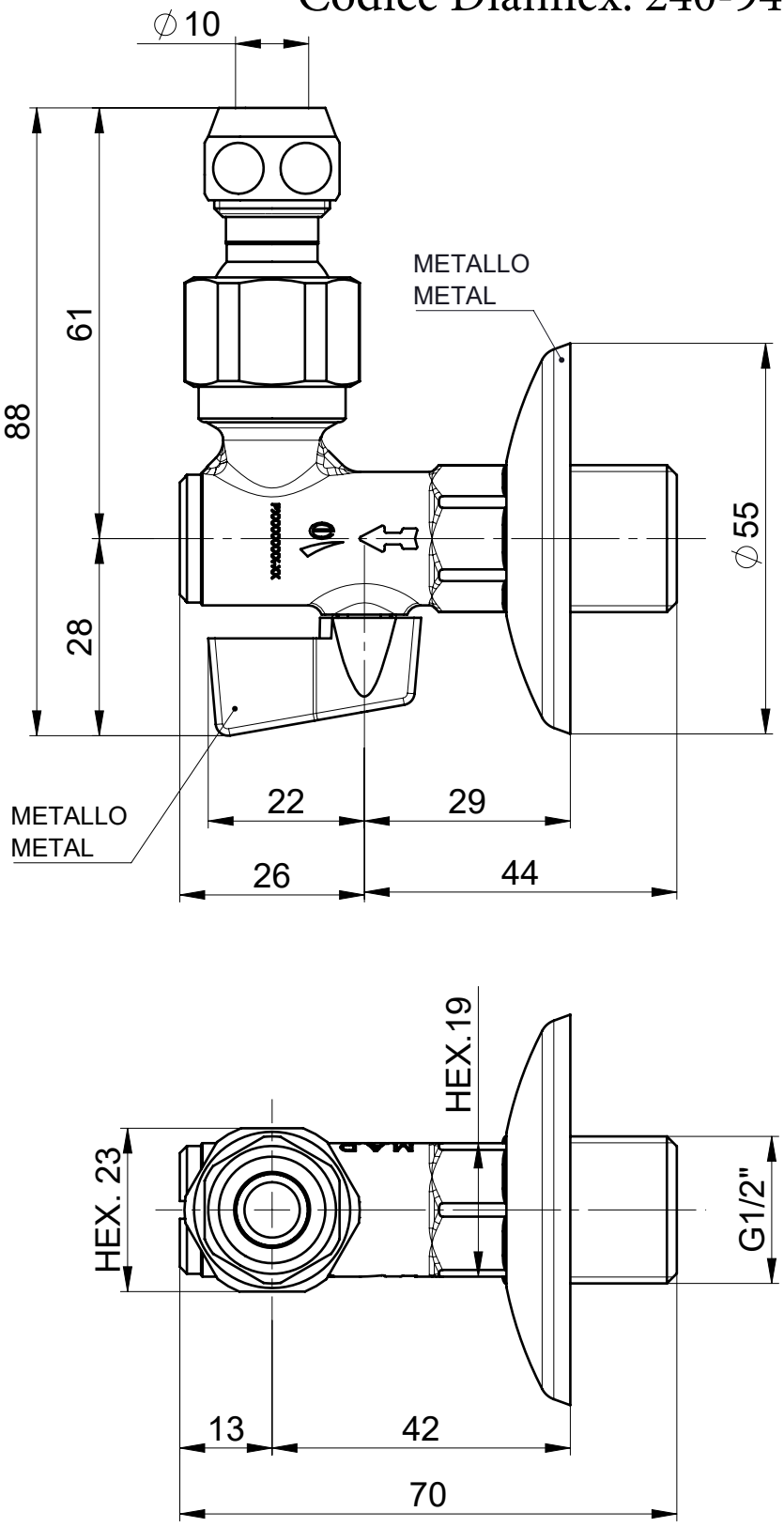

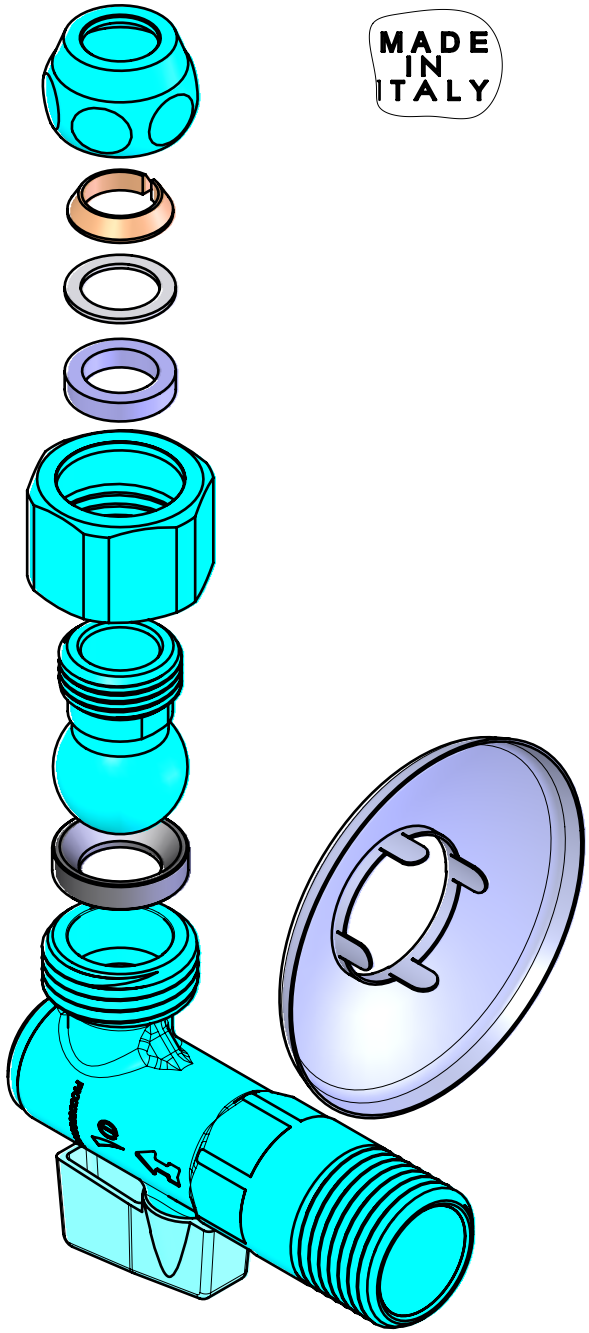

MADE IN ITALY

Rev. Dianflex: 240-9424

DISEGNATO/DRAWN: S.Murari	DATA/DATE: 07/01/2025	APPROVATO/CHECKED: M.S.	DATA/DATE: 07/01/2025	SCALA/SCALE: 1:1	FORMAT: A4 Datasheet
MATERIALE BASE/BASE MATERIAL: UNI EN 12165 CW617N-DW		ASPETTO / APPEARANCE: CROMATO / CHROME PLATED			
TENUTA SFERA/SPHERE SEAL: NBR 70ShA O-ring		TENUTA ASTA/SPINDLE SEAL: NBR 70ShA O-ring			
NUM.DIS/DRAW.-NR.: 502000013-DS	DESCRIZIONE/DESCRIPTION: VALVOLA A SFERA SOTTOLAVABO DN8 G1/2"M x Ø10 RAME UNDERSINK BALL VALVE DN8 G1/2"M x Ø10 Cu				