Codice Dianflex: 245-101

MURO
Wall
Mur

Descrizione / *Description / Description*

Rubinetto a muro temporizzato
Self-closing wall tap
Robinet mural temporisé

Materiali / *Materials / Matériels*

Componenti in finitura
Finishing components
Components en finision

Ottone/*Brass*/*Laiton*

Componenti torniti
Machined components
Composants tournés

Ottone/*Brass*/*Laiton*

Guarnizioni
Gaskets
Joints

EPDM

Componenti plastica
Plastic components
Composants en plastique

POM

Finitura superficiale
Surface finishing
Finition de la surface

Conforme/*According/Confomément* EN 248

In accordo alla EN 9227 in merito all'aggressione salina
According to EN 9227 regarding saline aggression
Conformément à la norme EN9227 concernant l' agression saline

Immagine / *Picture / Image*

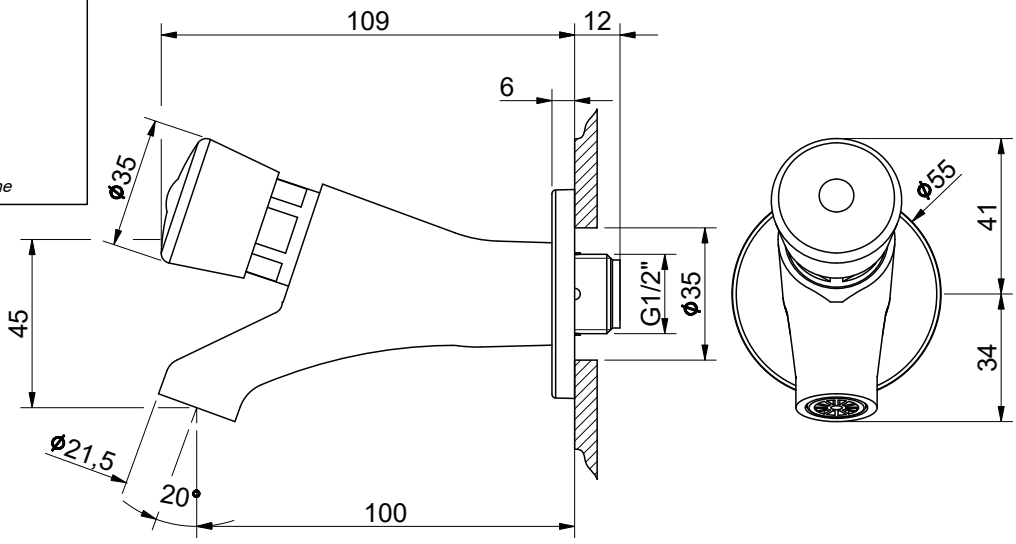

Caratteristiche / *Features*

5 - 70 °C

-

21 l/min (3 bar)

Min 0.5 - Max 6 (*Recommended 2-4*) bar

Art.	9003F
1900300R00CR00000	5

100% Made in Italy

15 Years Warranty