Codice Dianflex: 371-3243

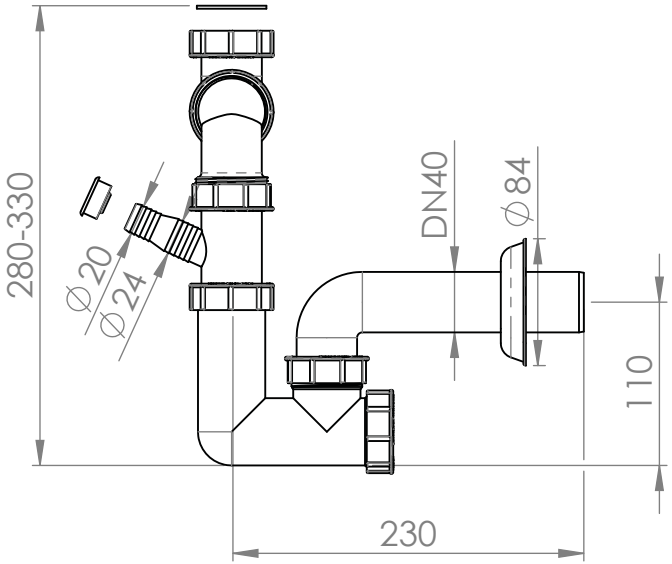

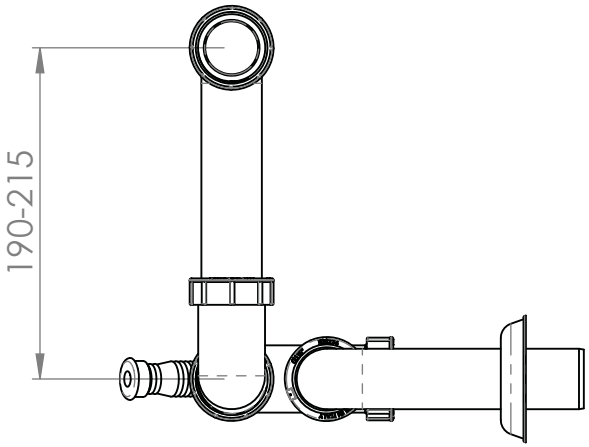

REV.	REVISION DESCRIPTION	DRAFTSMAN	DATA	APPROVED

D710	CUSTOMER CODE		VOLUME (cm³) / PESO (g)	
			UNITS mm	MOULD CODE
UNI EN ISO 228 UNI ISO 22768-mK UNI EN 274		DATE	NAME	DRAWING TYPE Technical
	Drawn	14/10/2020	SCALE	1:5
	Approved			
	MATERIAL	TREATMENTS	COLOR / MATERIAL FINISH	A4

ITEM DESCRIPTION
SIFONE ISPEZIONABILE SALVASPAZIO AD 1 VIA CON ATTACCO LAVASTOVIGLIE