Codice Dianflex: 371-M3090

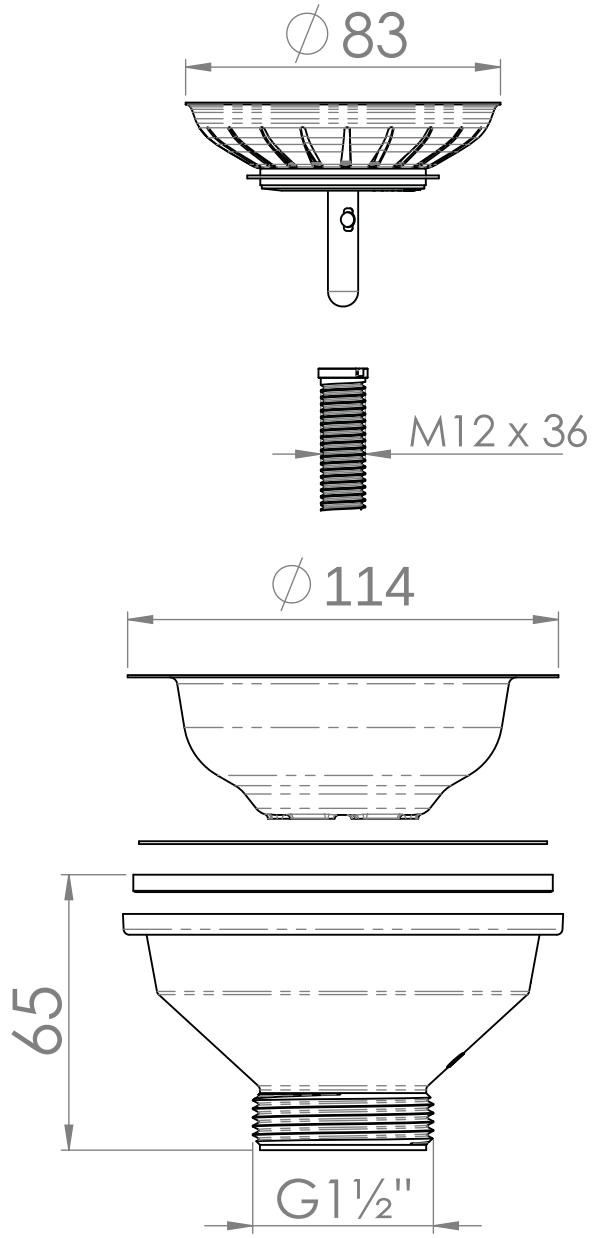

REV.	REVISION DESCRIPTION	DRAFTSMAN	DATA	APPROVED

D550-36	CUSTOMER CODE		VOLUME (cm³) / PESO (g)	
			UNITS mm	MOULD CODE
UNI EN ISO 228 UNI ISO 22768-mK UNI EN 274		DATE	NAME	DRAWING TYPE Technical
	Drawn	30/07/2020		SCALE 1:5
	Approved			
	MATERIAL	TREATMENTS	COLOR / MATERIAL FINISH	A4
	ITEM DESCRIPTION *PILETTA Ø114 CLASSIC SENZA TP* *Ø114 BASKET WASTE WITHOUT OVERFLOW*			