Codice Dianflex: 371-M3095

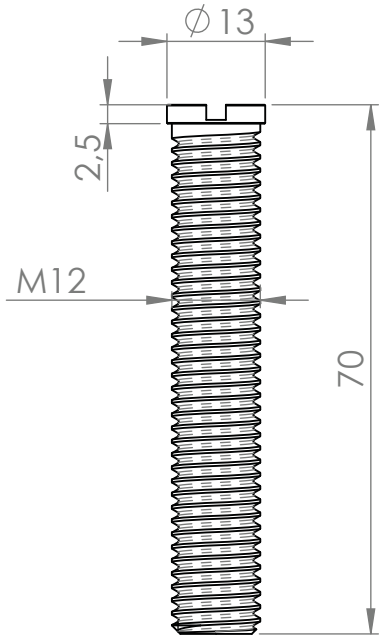

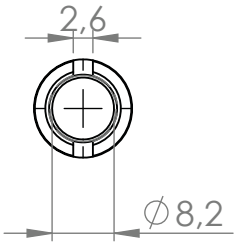

REV.	REVISION DESCRIPTION	DRAFTSMAN	DATA	APPROVED

DC7216	CUSTOMER CODE	VOLUME (cm³) / PESO (g)	
		UNITS mm	MOULD CODE
	DATE	NAME	DRAWING TYPE Technical
Drawn	02/08/2021		1:1
Approved			

MATERIAL	TREATMENTS	COLOR / MATERIAL FINISH	
OTTONE CW614N NICHEL BRASS	NICHELATURA 7µ 7µ NICHEL		A4

BUSSOLA M12x70
M12x70 FIXING BOLT