Codice Dianflex: 371-M3095-1236

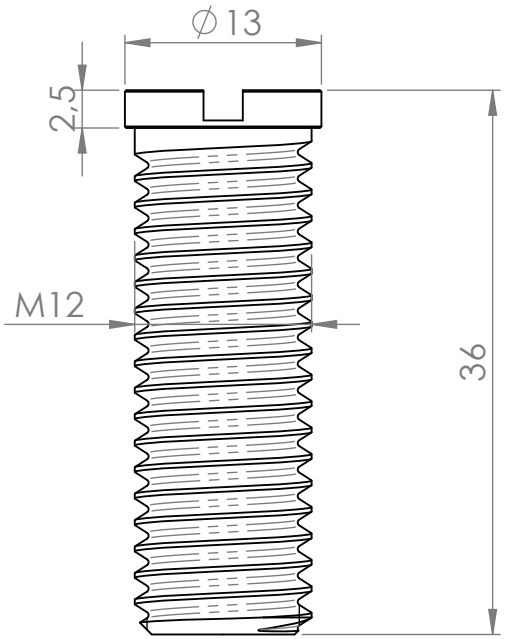

SCALE:
1:1

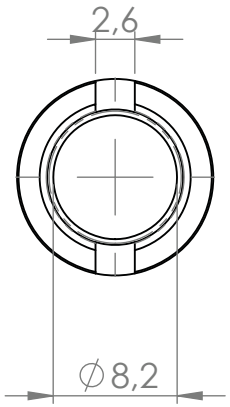

REV.	REVISION DESCRIPTION	DRAFTSMAN	DATA	APPROVED

DC7149	CUSTOMER CODE	VOLUME (cm³) / PESO (g)	
		UNITS: mm	MOULD CODE

	DATE	NAME	DRAWING TYPE
Drawn	19/09/2024		Technical
Approved			2:1

MATERIAL	TREATMENTS	COLOR / MATERIAL FINISH	
OTTONE CW614N NICHEL BRASS	NICHELATURA 4-5µ 4-5µ NICKEL		A4

ITEM DESCRIPTION
BUSSOLA M12x36mm
M12x36mm FIXING BOLT