Codice Dianflex: 371-M3103

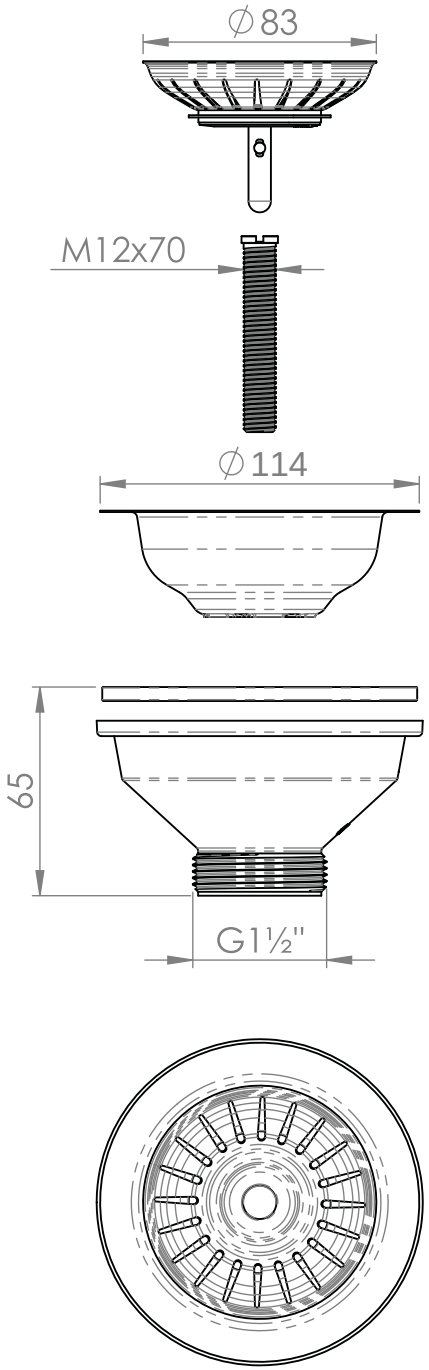

REV.	REVISION DESCRIPTION	DRAFTSMAN	DATA	APPROVED

550-70-L	CUSTOMER CODE		VOLUME (cm³) / PESO (g)	
			UNITS mm	MOULD CODE
UNI EN ISO 228 UNI ISO 22768-mK UNI EN 274		DATE	NAME	DRAWING TYPE Technical
	Drawn	08/10/2020		SCALE 1:2
	Approved	27/10/2020		
	MATERIAL	TREATMENTS	COLOR / MATERIAL FINISH	A4
	ITEM DESCRIPTION *PILETTA Ø114 MODELLO CLASSIC LUCIDA*			