Codice Dianflex: 371-M3107

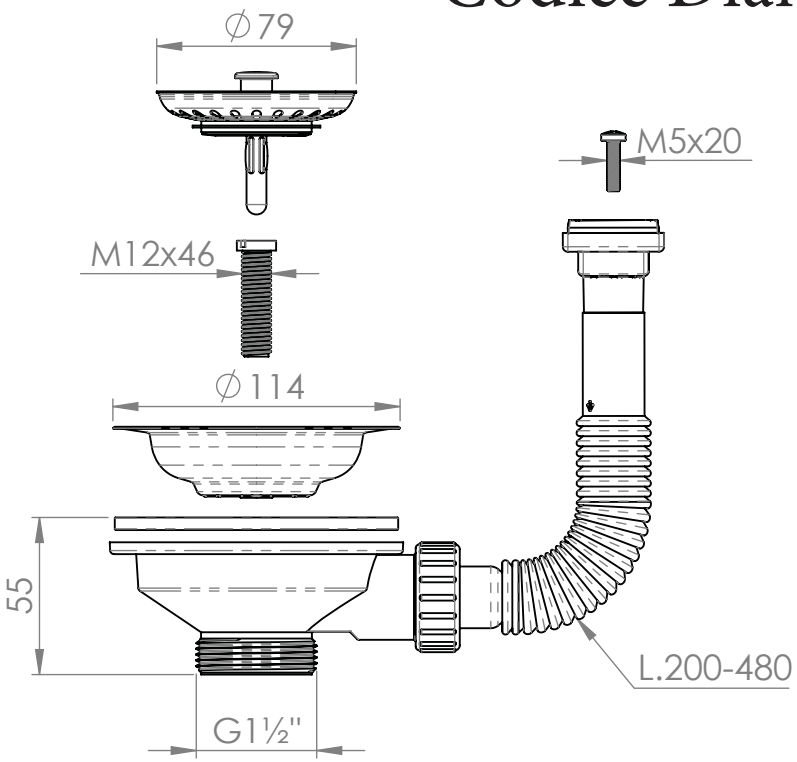

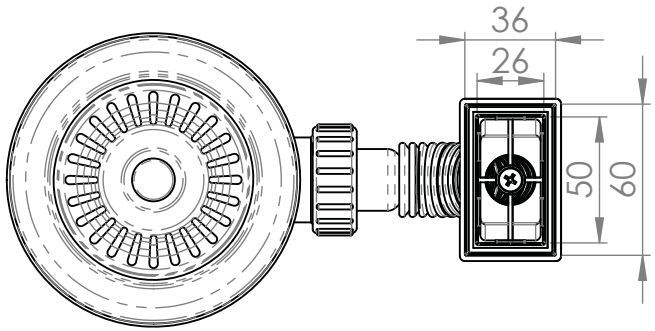

REV.	REVISION DESCRIPTION	DRAFTSMAN	DATA	APPROVED

D631-RE	CUSTOMER CODE		VOLUME (cm³) / PESO (g)	
			UNITS mm	MOULD CODE
UNI EN ISO 228 UNI ISO 22768-mK UNI EN 274		DATE	NAME	DRAWING TYPE Technical
	Drawn	24/09/2020		1:3
	Approved			
	MATERIAL	TREATMENTS	COLOR / MATERIAL FINISH	A4

ITEM DESCRIPTION
PILETTA Ø114 TAPPO CESTELLO PER LAVELLO CON FORO Ø90 CON TP RETTANGOLARE PER SGOCCIOLATOIO - MULTI RAY ECO