# Codice Dianflex: 371-M357

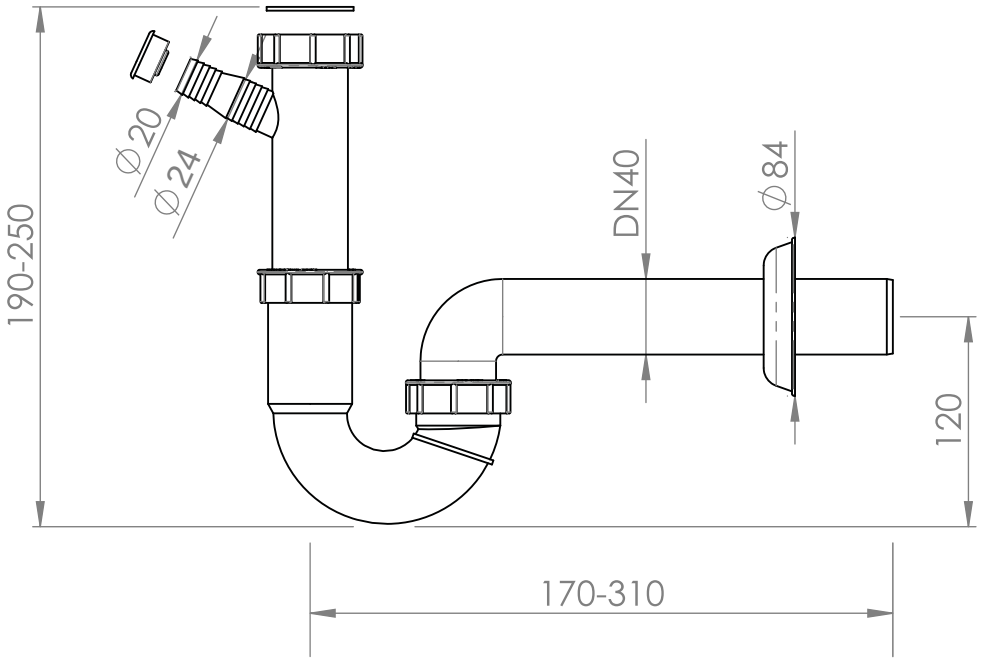

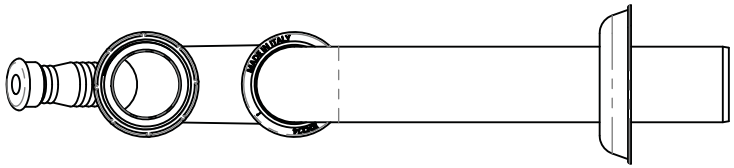

| REV. | REVISION DESCRIPTION | DRAFTSMAN | DATA | APPROVED |
|---|---|---|---|---|
| | | | | |
| | | | | |
| | | | | |
| | | | | |

| | | | | |
|---|---|---|---|---|
| D211-AL | CUSTOMER CODE | | VOLUME (cm³) / PESO (g) | |
| | | | UNITS mm | MOULD CODE |
| UNI EN ISO 228<br>UNI ISO 22768-mK<br>UNI EN 274 | | DATE | NAME | DRAWING TYPE Technical |
| | Drawn | 13/10/2020 | | SCALE 1:4 |
| | Approved | | | |
| | MATERIAL | TREATMENTS | COLOR / MATERIAL FINISH | A4 |
| | ITEM DESCRIPTION<br>*SIFONE A "U" AUTOPULENTE AD 1 VIA CON ATTACCO LAVASTOVIGLIE ENTRATA* G1½ USCITA Ø40 | | | |