Codice Dianflex: 371-M3602

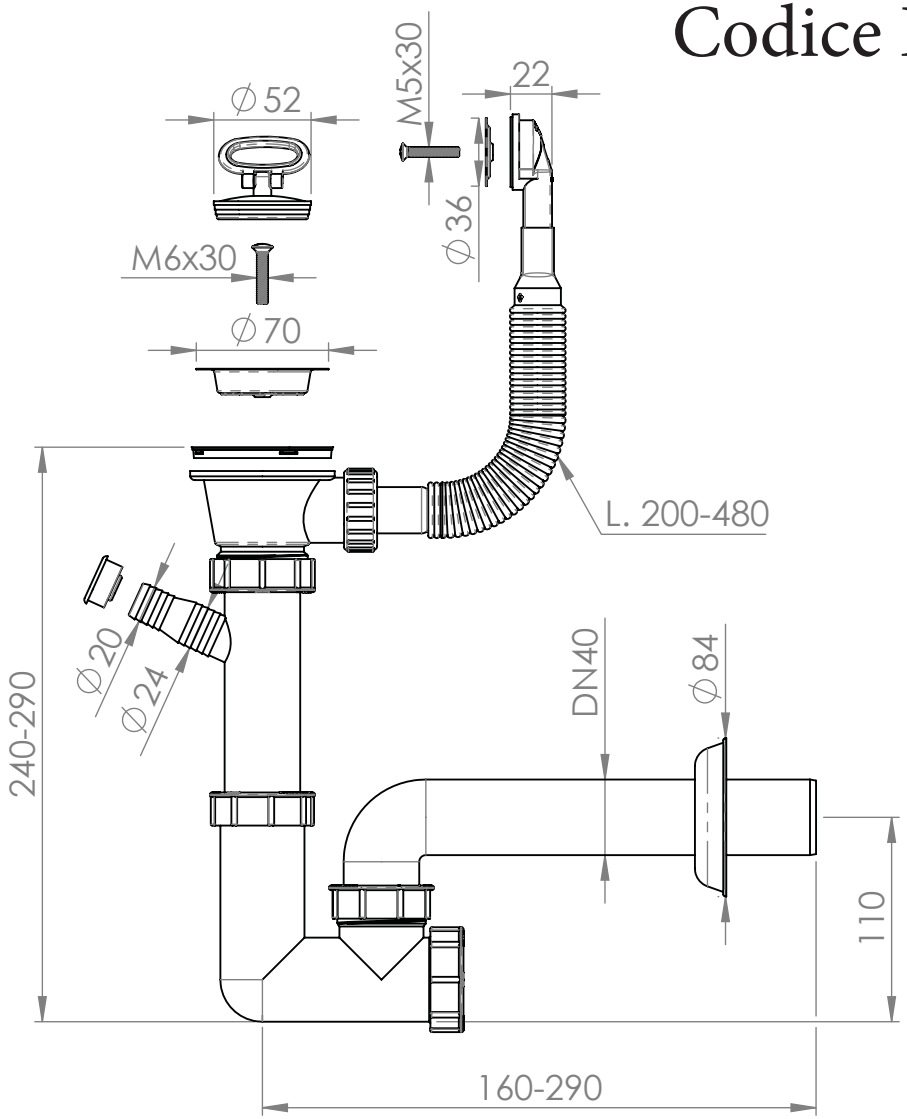

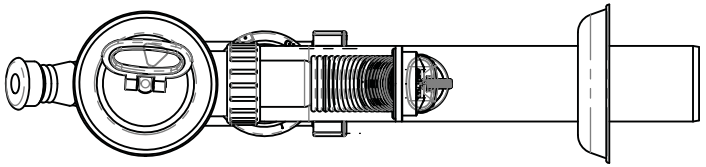

REV.	REVISION DESCRIPTION	DRAFTSMAN	DATA	APPROVED

D470B-205-AL	CUSTOMER CODE		VOLUME (cm³) / PESO (g)	
			UNITS mm	MOULD CODE
UNI EN ISO 228 UNI ISO 22768-mK UNI EN 274		DATE	NAME	DRAWING TYPE Technical
	Drawn	04/12/2020		1:4
	Approved			
	MATERIAL	TREATMENTS	COLOR / MATERIAL FINISH	A4
	ITEM DESCRIPTION			