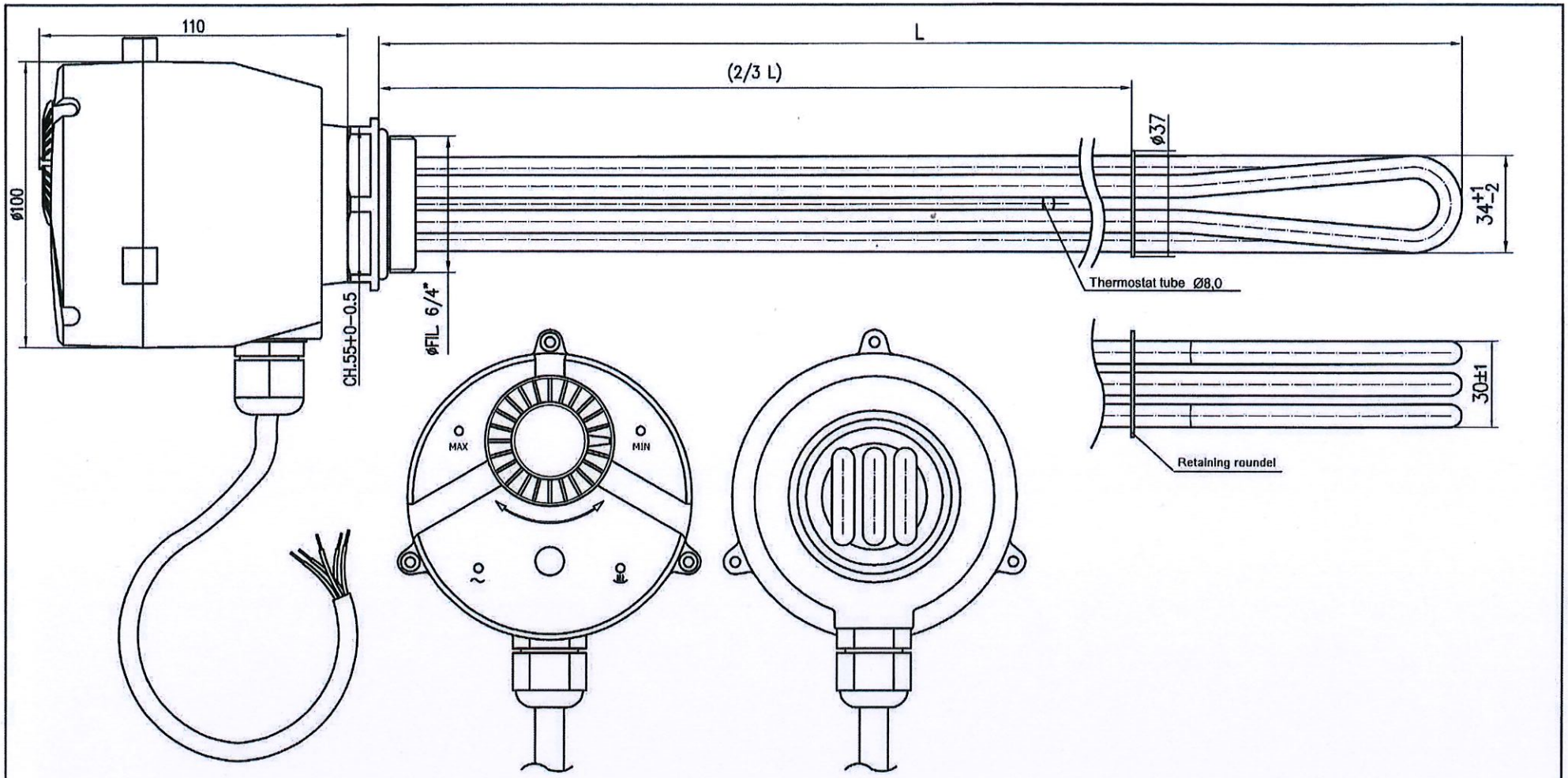

	2000 OWRG2 / 400V	3000 OWRG2 / 400V	4500 OWRG2 / 400V	6000 OWRG2 / 400V	9000 OWRG2 / 400V
LENGTH - L	300 ±10 mm	300 ±10 mm	375 ±10 mm	450 ±10 mm	580 ±10 mm
RATED VOLTAGE	400V 3N~				
RATED POWER HEATING SET	2000 W +5% -10%	3000 W +5% -10%	4500 W +5% -10%	6000 W +5% -10%	9000 W +5% -10%
RATED POWER ELEMENTS	3 x 667 W	3 x 1000 W	3 x 1500 W	3 x 2000 W	3 x 3000 W
DIELECTRICAL STRENGTH	~1500V – 3s				
INSULATION RESISTANCE	>10MΩ - 500V				
WATTS DENSITY	6,1 W/cm2	9,1 W/cm2	10,2 W/cm2	10,8 W/cm2	12 W/cm2
FEEDER CABLE	5x1,5mm2 1,5m	5x1,5mm2 1,5m	5x1,5mm2 1,5m	5x1,5mm2 1,5m	5x1,5mm2 1,5m

	Name	Signature	Date
Constructed	----------		
Drawed			21 11 2014
Approved			
Scale			

UNIVAL MADE IN ITALY

Elements name: Heating set

Drawing No: 1-OWRG-2/7

Type:
2000 OWRG2/400V
3000 OWRG2/400V
4500 OWRG2/400V
6000 OWRG2/400V
9000 OWRG2/400V